ESC 4in1 Pilotix 100A 8S Improved version

User manual

PILOTIX™

2026

Content

1. **Product overview** 3

2. **Wiring guide** 4

2.1. Power Input (Battery Connection) 4

2.2. Motor Connections 4

2.3. Control Connector (8-Pin JST-SH) 4

3. **Safety warnings** 6

Contacts: 6

1. Product overview

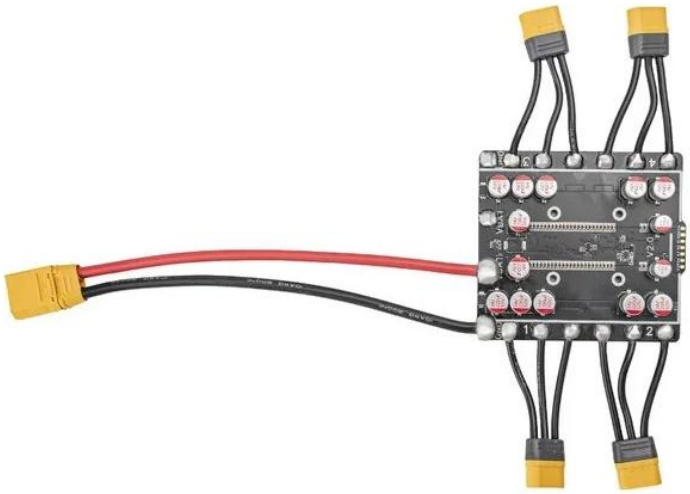

Fig.1. ESC 4in1 Pilotix 100A 8S Improved version

The Pilotix ESC 4in1 Pilotix 100A 8S Improved version is an electronic speed controller designed for FPV applications, featuring a 4 in 1 configuration that supports input voltages ranging from 3 to 8S. It operates with a continuous current rating of 4 x 100A and a peak current capability of 4 x 120A, running BLHeli_S / Bluejay firmware. This model supports DShot150, DShot300, DShot600, Multishot, and OneShot protocols, while providing current telemetry through the onboard current sensor. The board measures 89 x 100 mm with a 30.5 x 30.5 mm (M3) mounting pattern.

2. Wiring guide

According to the diagram, please follow these steps for a safe and reliable installation:

2.1. Power Input (Battery Connection)

- Power cord: The supplied power cord with an XT90 connector is pre-soldered to the GND and VBAT pads at the top edge.
- Positive (+): For your own battery lead, solder the Red wire to a pad marked VBAT at the top edge.
- Negative (-): Solder the Black wire to the pad marked GND next to the VBAT pad you use.
- Battery inputs: The board has two VBAT and two GND pads (left and right pairs), as shown in Fig. 2. Supported input voltage: 3-8S.
- Capacitors: The board has onboard HV 220µF 50V capacitors. Keep the power wires as short as possible to minimize electrical noise.

2.2. Motor Connections

The ESC has 12 side pads grouped for 4 motors.

- Motor 1 (Top left): Connect the three wires from your motor to the pads marked 1.
- Motor 2 (Bottom left): Connect to pads marked 2.
- Motor 3 (Top right): Connect to pads marked 3.
- Motor 4 (Bottom right): Connect to pads marked 4.
- Motor leads: Motor leads with connectors are pre-soldered to the motor pads. 4 x MR60-M connectors are included in the package.

Note: If a motor spins in the wrong direction, you can swap any two wires or change the direction in the Bluejay Configurator.

2.3. Control Connector (8-Pin JST-SH)

The connector on the bottom edge links the ESC to your Flight Controller (FC). The same signals are also available on the solder pads next to it (CUR, S4, S3, S2, S1, GND, V+).

- VBAT: Battery voltage output to the FC.
- GND: Common ground.
- CUR: Current sensor output.
- S1 - S4: Motor signals 1 through 4.
- NONE: Not connected.

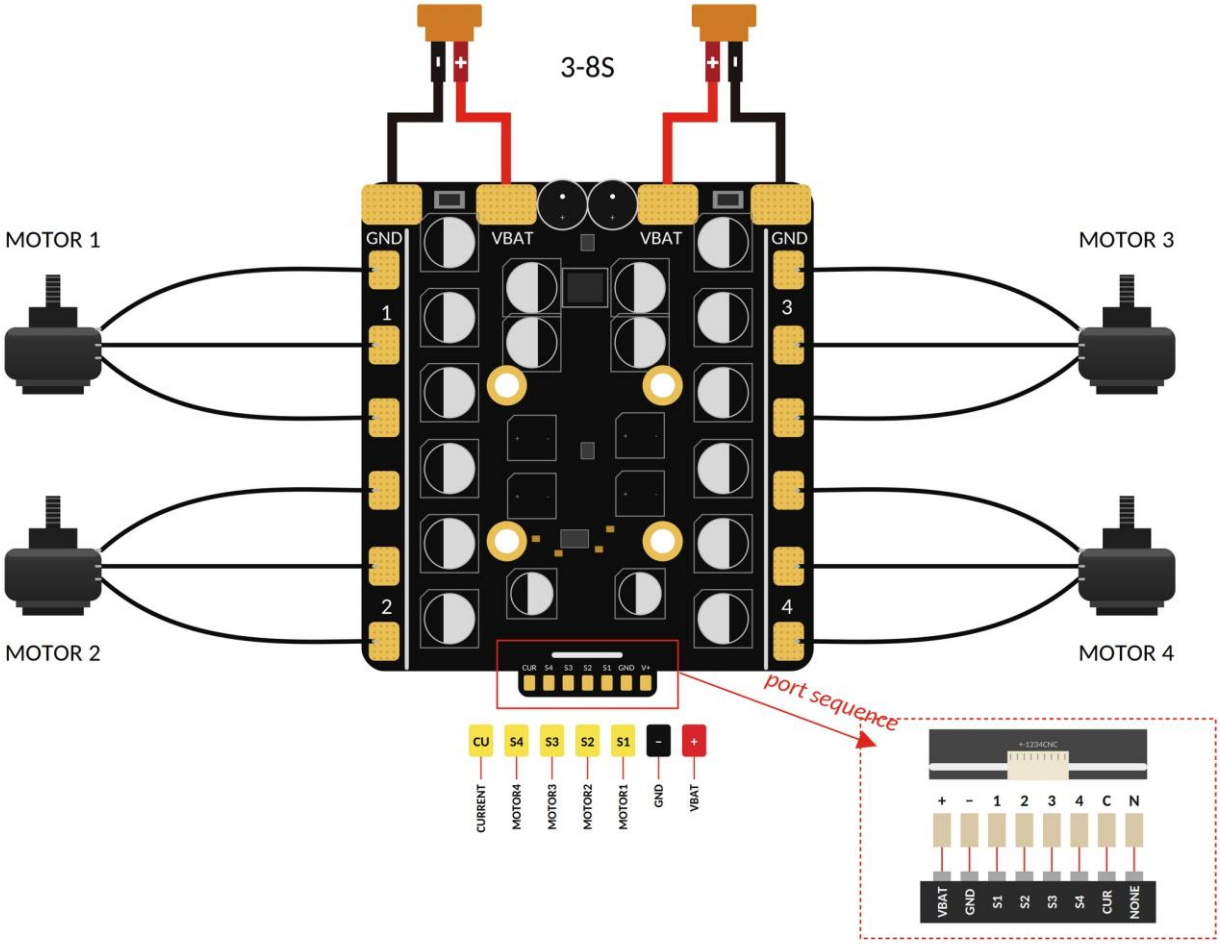

Fig.2. Wiring diagram

3. Safety warnings

- Smoke stopper: Always use a smoke stopper for the first power-on.
- Polarity: Double-check (+) and (-) before connecting the battery. Reversed polarity will destroy the ESC instantly.
- Condensation: If bringing the drone from a cold environment to a warm room, wait 30-60 minutes for moisture to evaporate before powering on.

Contacts:

WhatsApp: +420 777 054 888

Email: support@pilotix.eu

Telegram: https://t.me/PilotixSupport_bot