ESC 4in1 Pilotix 100A 8S Improved version

EN

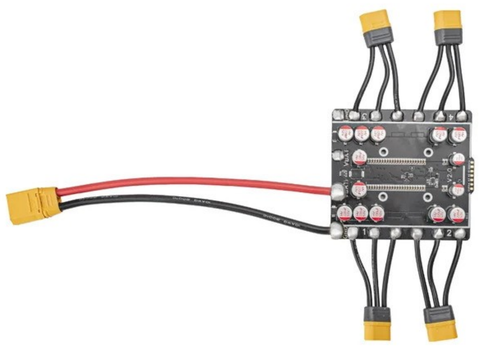

Four-in-one electronic speed controller featuring an EFM8BB21 microcontroller unit supporting BLHeli_S and Bluejay firmware. Operates with 3-8S input voltage through an XT90 power connector, providing 100A continuous current and 120A peak current per channel. Supports multiple communication protocols including DShot150, DShot300, DShot600, Multishot, OneShot, and PWM, with bi-directional DShot capability and 24 kHz PWM frequency. Features JST-SH 1.0mm and solder pad signal connections with current telemetry support. Measures 89 x 100mm with 30.5 x 30.5mm M3 mounting pattern and weighs 92.8g. Operates in temperatures from -20°C to 40°C with 20-95% relative humidity, requiring active cooling for propellers larger than 7 inches.

Product details	
Model	ESC 4in1 Pilotix 100A 8S Improved version
SKU	6456
Electrical specifications	
ESC type	4 in 1
Continuous current	4 x 100 A
Peak current	4 x 120 A
Input voltage	3 - 8S
Power connector	XT90
MCU	
ESC MCU	EFM8BB21
Firmware	BLHeli_S, Bluejay
ESC configurator	Bluejay Configurator
PWM Frequency	24 kHz
ESC protocols	DShot150, DShot300, DShot600, Multishot, OneShot, PWM
Bi-directional DShot	yes
Interfaces	
Control connector	JST-SH 1.0 mm, Solder pads

Telemetry support	Current
Motor output wire	Solder pads
Mechanical specifications	
Dimensions	89 x 100 mm
Mounting	30.5 x 30.5 mm (M3)
Weight	92.8 g
Operating conditions	
Humidity range	20-95% RH (non-condensing)
Operating temperature	-20 - 40 °C
Storage temperature	-30 - 50 °C
Cooling requirements	Active (>7" props)
Common	
Package contents	Control cable, Screws (4x), Nuts (4x), Power cord, MR60-M (4x), Shock-absorbing mount (X-shaped)
Warranty	2 years

Wiring diagram

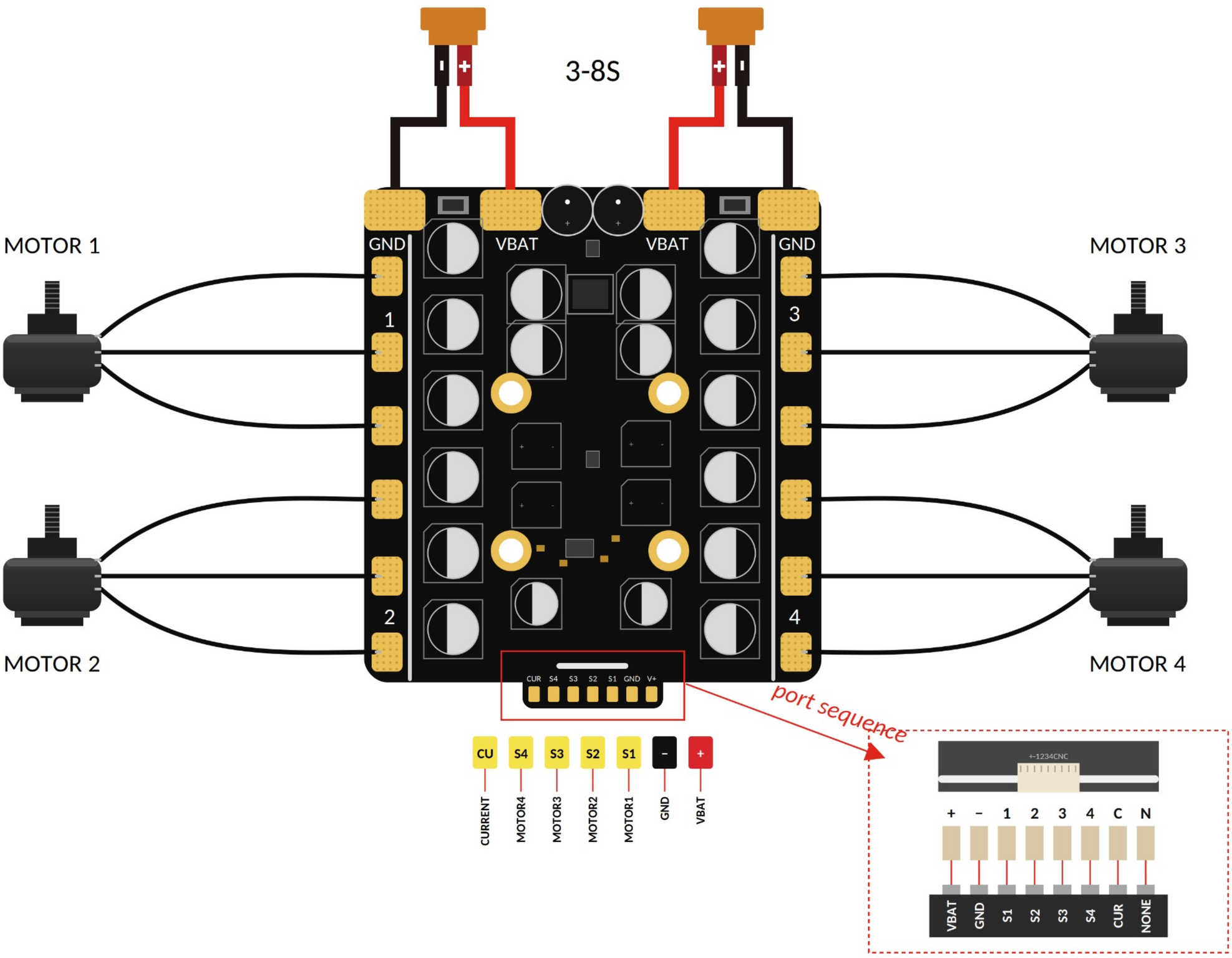
3-8S
MOTOR 1
MOTOR 3
MOTOR 2
MOTOR 4
GND
VBAT
VBAT
GND
1
2
3
4
CUR S4 S3 S2 S1 GND V+
port sequence
CU S4 S3 S2 S1 - +
CURRENT
MOTOR4
MOTOR3
MOTOR2
MOTOR1
GND
VBAT
+-1234CNC
+ - 1 2 3 4 C N
VBAT GND S1 S2 S3 S4 CUR NONE