2808-1100KV

EN



Pilotix 2808-1100KV FPV motor featuring a 28mm diameter by 8mm length stator with 14-pole configuration. Operates within a voltage range of 18V to 25.2V with a rated voltage of 25V, delivering maximum power output of 1152.5W at maximum current draw of 46.1A. The motor utilizes a 5mm diameter shaft with 15mm length and measures 33.8mm in diameter by 21mm in height. Equipped with 18AWG silicone cables measuring 150mm in length terminated with MR30-M connectors. Features 19 x 19mm M3 mounting pattern and weighs 60g. No-load current measures 1.5A at 10V.

Product details	
Model	2808-1100KV
SKU	5194
Electrical specifications	
Motor KV	1100 KV
Rated voltage	25 V
Operating voltage range	18 - 25.2 V
Maximum current	46.1 A
Maximum power	1152.5 W
No-load current	1.5 A @ 10 V
Mechanical specifications	
Configuration	14P
Stator size	28 x 8 mm
Shaft size	Ø5 x 15 mm
Motor dimensions	Ø33.8 x 21 mm
Silicone cable	18 AWG
Silicone cable length	150 mm
Cable connector	MR30-M
Mounting	19 x 19 mm (M3)

Mounting screws	M3 × 9 mm (×4), M3 x 12 mm (x4)
Weight	60 g
Common	
Package contents	Mounting screws
Warranty	2 years

Mechanical specification

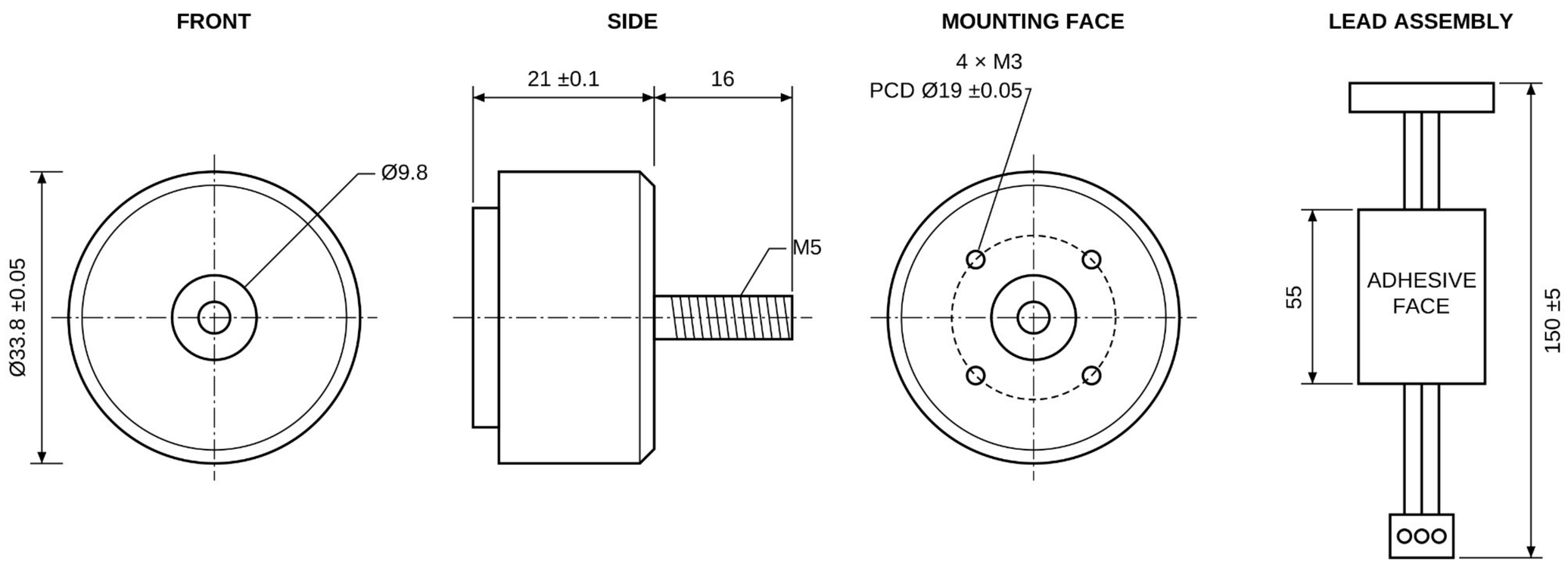

Motor performance data

Model	Propeller	Throttle/speed	Voltage (V)	Current (A)	Thrust (g)	Input (W)	Efficiency (g/W)
2808 1100KV	7035 three-blade propeller	1300	25	5.80	665	145	4.586
		1400	25	9.20	934	230	4.061
		1500	25	13.30	1190	332.5	3.579
		1600	25	18.30	1540	457.5	3.366
		1700	25	26.30	1910	657.5	2.905
		1800	25	34.90	2301	872.5	2.637
		1900	25	43.30	2468	1082.5	2.280
		2000	25	46.10	2530	1152.5	2.195