Pilotix Stack F405 V3 ICM42688 AM32 60A

User manual

2026

Content

1. **Product overview** 3

2. **ESC installation & wiring** 4

3. **Flight controller (FC) wiring** 5

4. **Safety & usage rules** 7

Contacts: 7

1. Product overview

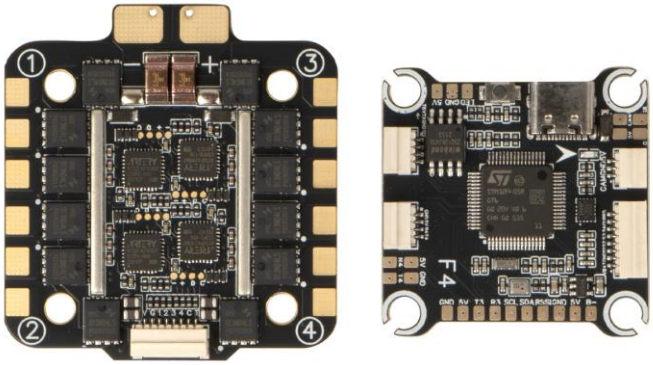

Fig.1. Pilotix Stack F405 V3 ICM42688 AM32 60A

Pilotix Stack F405 V3 ICM42688 AM32 60A is an FPV stack comprising a flight controller (FC) and a 4-in-1 ESC. The FC is based on the STM32F405 MCU with an ICM42688-P gyroscope (SPI connection, 8 kHz update rate), a built-in accelerometer and an SPL06 barometer, and supports Betaflight and INAV firmware. It features analog OSD, one analog video input, 5 UART ports, 1 I2C port, 8 motor control outputs, a USB Type-C port, and 5 V / 2.2 A and 12 V / 2.2 A BEC outputs. The 4-in-1 ESC is based on the AT32F421K8U7 MCU running AM32 firmware and provides 60 A continuous current (70 A peak) per output with 3–6S input voltage. Bi-directional DShot is supported. Both boards have a 30.5 × 30.5 mm (M3) mounting pattern.

2. ESC installation & wiring

The ESC is designed to handle high current loads. Pay close attention to the power leads.

Wiring Steps:

1. Power Input: Solder the battery leads to the "+" and "-" pads on the ESC (solder pads, no connector is fitted). Ensure the polarity is correct. Input voltage range: 3–6S.
2. Capacitor: Solder the supplied 1000 µF / 35 V capacitor to the power pads, as close to the pads as possible, to filter voltage spikes. Observe the capacitor polarity. Two capacitors are recommended for optimal performance.
3. Motor Pads: Solder the motor wires to the pads on the left (motors 4 and 3) and on the right (motors 2 and 1), as shown in Fig.2.
4. Link to FC: Connect the 8-pin harness to the socket on the top edge of the ESC and to the matching socket on the FC. It carries the battery voltage (VBAT), ground (GND), motor signals (S1–S4) and the current sensor signal (CUR). The remaining pin (NC on the ESC, R5 on the FC) is not used by the ESC.

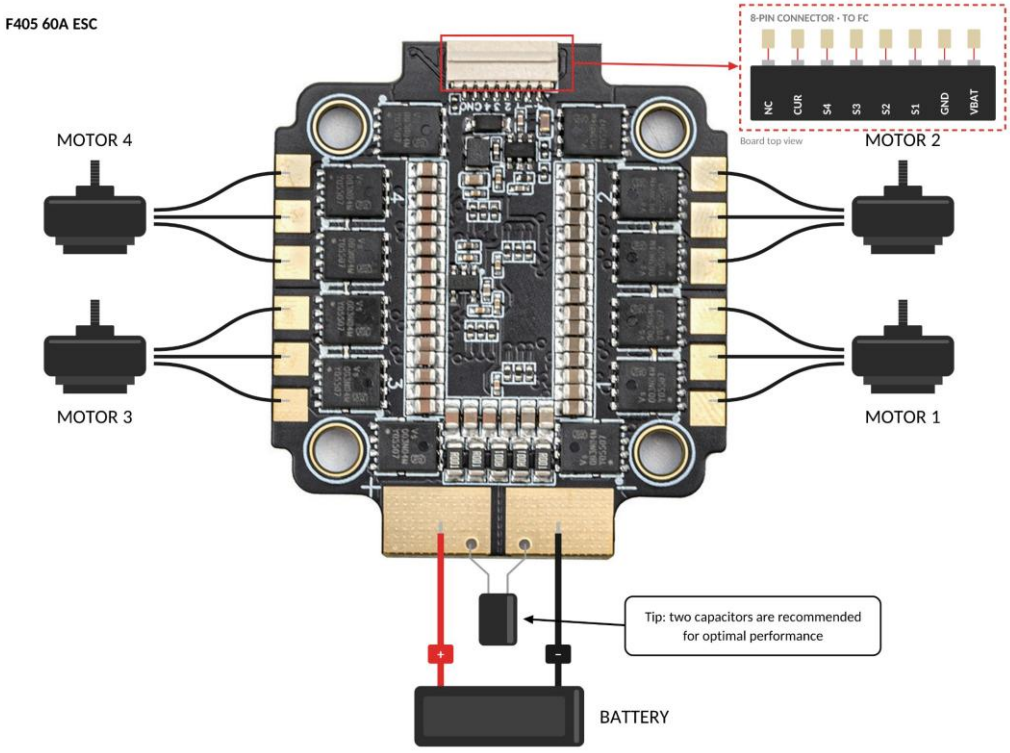

Fig.2. ESC installation & wiring

3. Flight controller (FC) wiring

The F405 V3 FC offers a "Plug-and-Play" experience for many peripherals.

Receiver & Serial Ports (UARTs):

- UART 3: GPS (GPS TX to R3, GPS RX to T3).
- UART 4: Receiver (receiver TX to R4, receiver RX to T4). Supported protocols: SBUS and CRSF (ELRS, TBS Nano RX).
- UART 5: R5 pin of the 8-pin ESC connector. It is not used by the ESC in this stack (ESC telemetry is limited to the current sensor).
- UART 6: VTX control (SmartAudio / IRC Tramp). Connect the control wire to the T6 pad.

Video & VTX:

- Camera: Connect an analog camera to the CAM, 5V and GND pads of the camera connector. The FC has one analog video input.
- VTX: Connect the VTX video wire to the VIDEO pad, ground to GND and power to V+. Before connecting, check that the voltage on the V+ pad is within the input voltage range of your VTX. The FC has 5 V / 2.2 A and 12 V / 2.2 A BEC outputs.

Additional components:

- LED strip: Connect the strip signal wire to the LED pad, and its power to the 5V and GND pads next to it.
- Beeper: Connect an active 5 V beeper to the 5V (BZ+) and B- (BZ-) pads.
- I2C (compass): If your GPS module has a built-in compass, connect SDA and SCL to the SDA and SCL pads of the FC.
- BOOT button: Hold the button while connecting the USB Type-C cable to enter DFU mode for firmware updating.

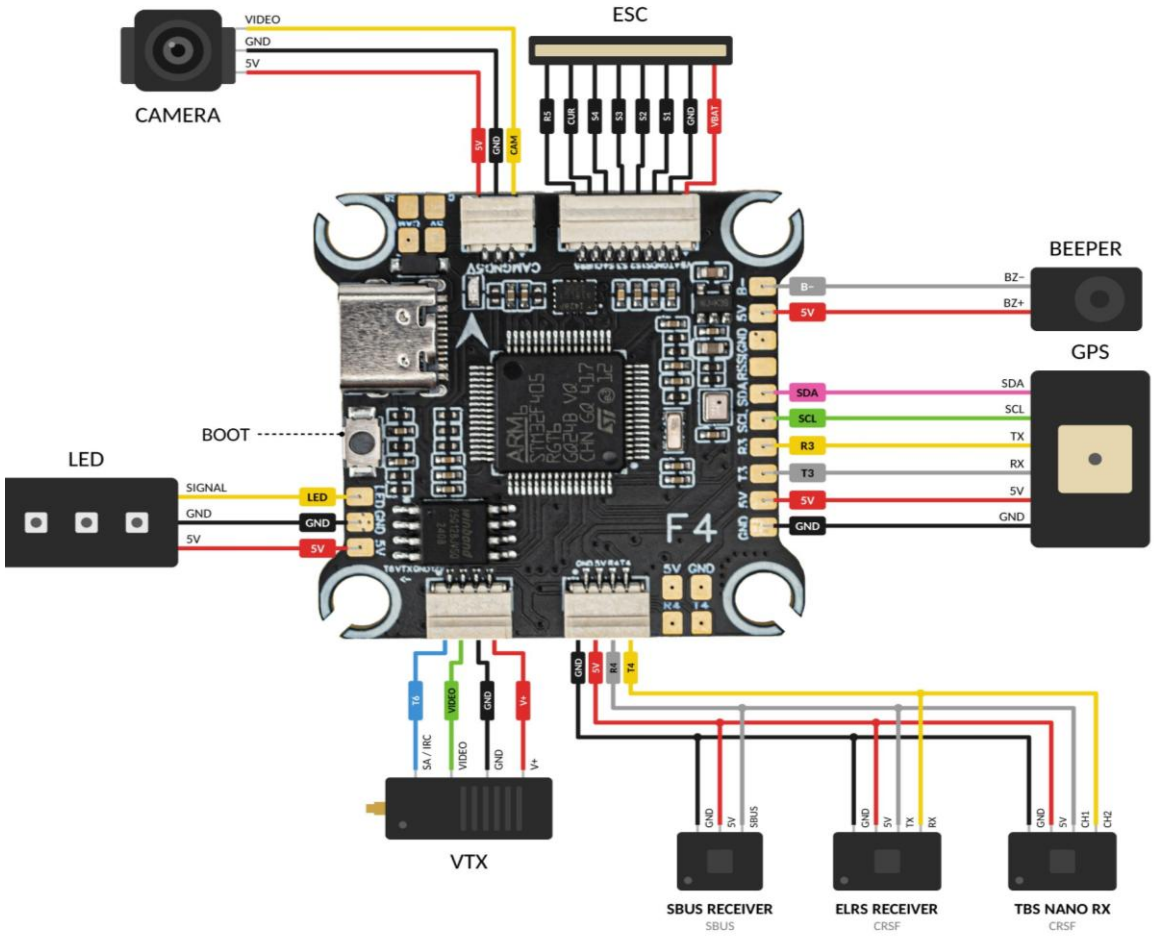

Fig.3. FC wiring diagram

4. Safety & usage rules

1. **Voltage Check:** Before connecting your VTX, verify that its input voltage range matches the voltage on the V+ pad of the FC. Connecting a VTX to an unsuitable supply voltage will cause immediate failure.
2. **Smoke Stopper:** Always use a current-limiting device for the first power-on.
3. **Firmware Updates:** Use esc-configurator.com for the AM32 ESC.
4. **Mounting:** Use the supplied shock-absorbing balls, screws and nuts. High-current ESCs create electromagnetic noise; keep the FC physically separated by at least 2-3mm from the ESC.
5. A 60A ESC generates significant heat. Do not mount the stack in an enclosed, unventilated space. Operating temperature: -20 °C to 40 °C.

Contacts:

WhatsApp: +420 777 054 888

Email: support@pilotix.eu

Telegram: https://t.me/PilotixSupport_bot