PILOTIX™

F405 V3 ICM42688 AM32 60A

EN

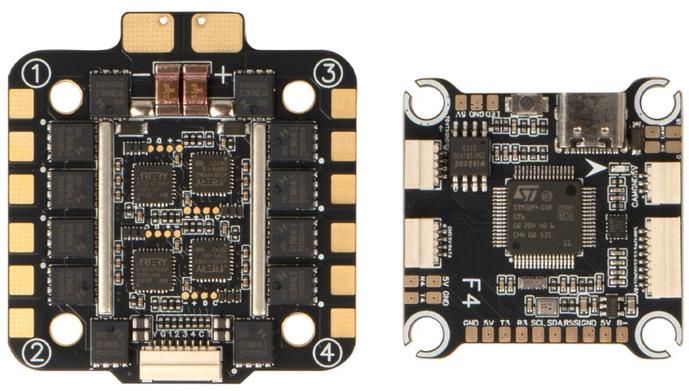

FPV stack comprising a flight controller and 4-in-1 ESC. The flight controller utilizes an STM32F405 MCU with ICM42688-P gyroscope operating at 8 kHz update rate via SPI connection, SPL06 barometer, and built-in accelerometer. Supports Betaflight and INAV firmware with analog OSD. Features 5 UART ports, 1 I2C port, 8 motor control outputs, USB Type-C interface, and dual BEC outputs at 5V/2.2A and 12V/2.2A. The 4-in-1 ESC uses AT32F421K8U7 MCU with AM32 firmware, providing 60A continuous current per output with 70A peak, supporting 3-6S input voltage. Both boards feature 30.5 x 30.5 mm mounting pattern. Includes 1000µF/35V capacitor. Operates in -20°C to 40°C temperatures.

Product details	
Model	F405 V3 ICM42688 AM32 60A
SKU	5046

FC	
MCU	
FC MCU	STM32F405
Firmware target	PILOTIXF405V32
Firmware support	Betaflight, INAV
OSD type	Analog OSD
Sensors	
Gyro	ICM42688-P
Gyro connection	SPI
Number of gyros	1
Accelerometer	Built-in
Barometer	SPL06
Gyro update rate	8 kHz
Electrical specifications	

BEC	5 V @ 2.2 A, 12 V @ 2.2 A
Interfaces	
Motor control outputs	8
ESC protocols	DShot150, DShot300, DShot600, Multishot, OneShot125, OneShot42, PWM, ProShot1000
Bi-directional DShot	yes
Receiver protocol	SBUS, CRSF
DFU button	yes
I2C port	1
LED strip output	yes
SD card slot	no
UART ports	5
Buzzer output	yes
USB port	USB Type C
Video inputs	1
Video input	Analog
Video output	Analog
Mechanical specifications	
Dimensions	37 x 37 mm
Mounting	30.5 x 30.5 mm (M3)
Weight	7 g

ESC	
Electrical specifications	
ESC type	4 in 1
Continuous current	4 x 60 A
Peak current	4 x 70 A
Input voltage	3 - 6S
Capacitor included	1 x 1000 µF @ 35 V

Power connector	Solder pads
MCU	
ESC MCU	AT32F421K8U7
Firmware	BLHeli_S, Bluejay
ESC configurator	Bluejay Configurator
ESC protocols	DShot150, DShot300, DShot600, Multishot, OneShot, PWM
Bi-directional DShot	yes
Interfaces	
Control connector	JST-SH 1.0 mm
Telemetry support	Current
Motor output wire	Solder pads
Mechanical specifications	
Dimensions	49 x 43 mm
Mounting	30.5 x 30.5 mm (M3)
Weight	20 g

Operating conditions	
Humidity range	20-95 % RH (non-condensing)
Operating temperature	-20 - 40 °C
Storage temperature	-30 - 50 °C
Common	
Package contents	Shock-absorbing balls (4x), Control cable, Screws (4x), Nuts (4x), Power cord, Solid-state capacitors , Heat shrink tubing
Warranty	2 years

FC wiring diagram

F405 FC · TOP SIDE

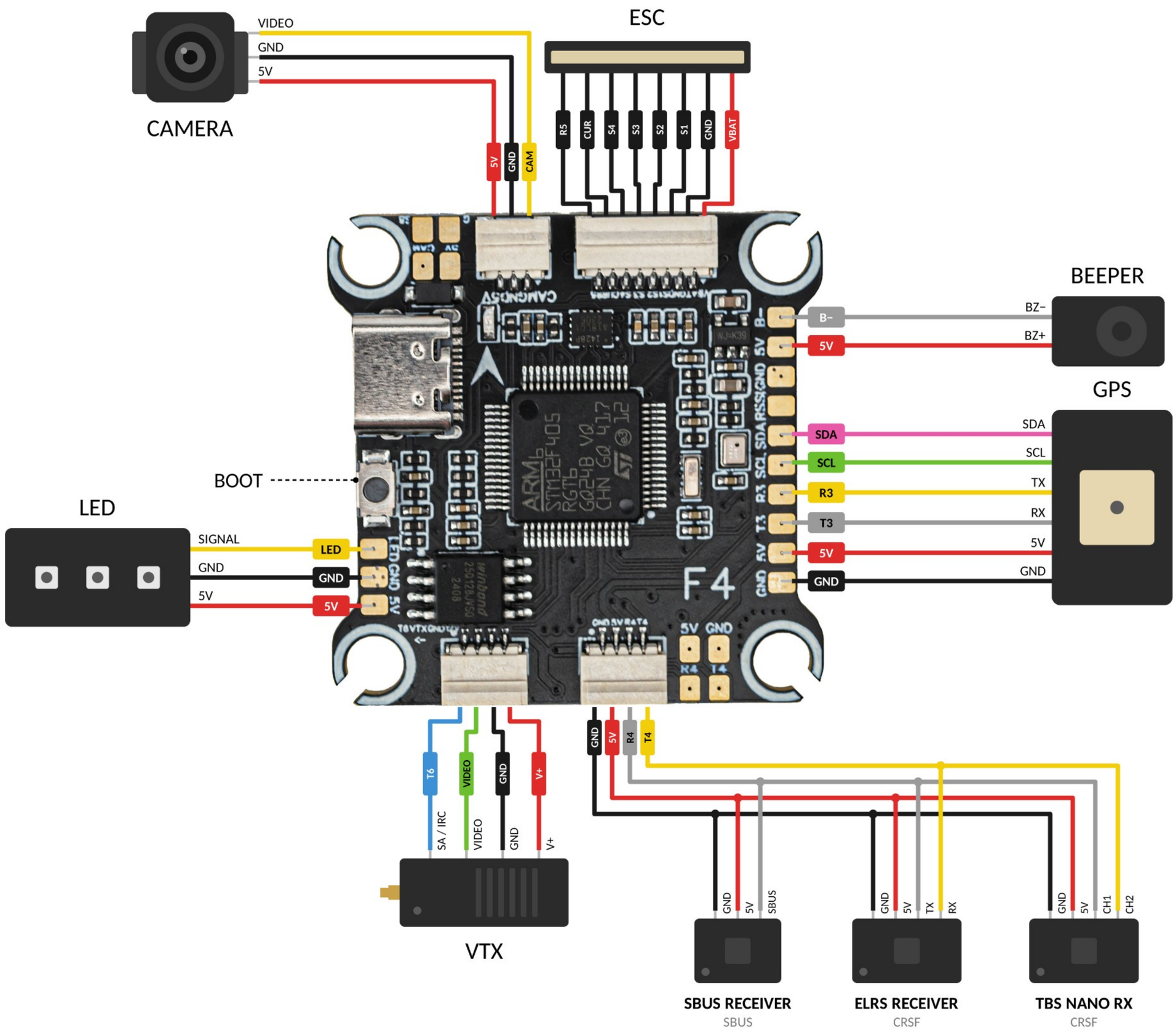

ESC wiring diagram

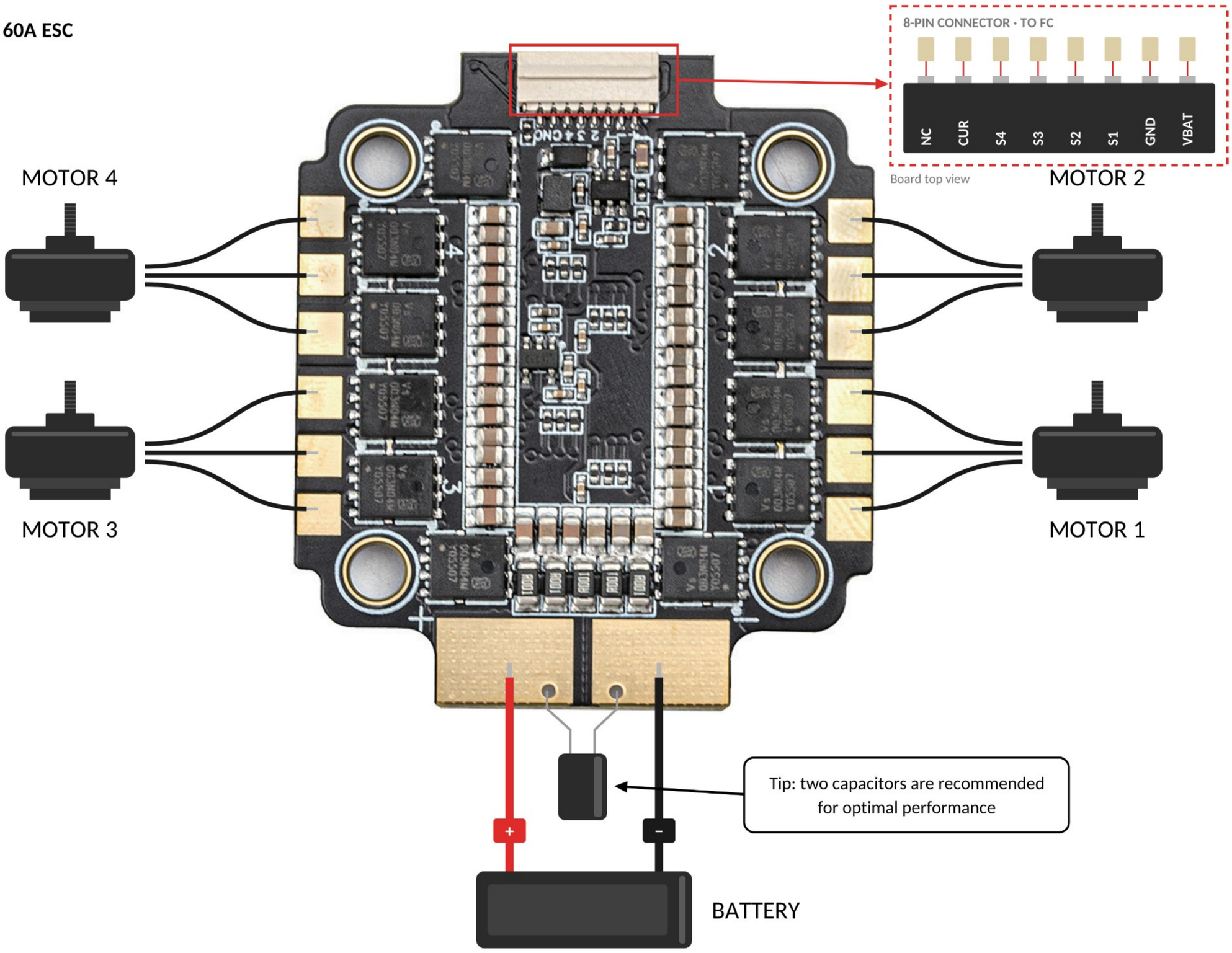
F405 60A ESC
8-PIN CONNECTOR · TO FC
NC
CUR
S4
S3
S2
S1
GND
VBAT
Board top view
MOTOR 4
MOTOR 2
MOTOR 3
MOTOR 1
Tip: two capacitors are recommended for optimal performance
+
-
BATTERY